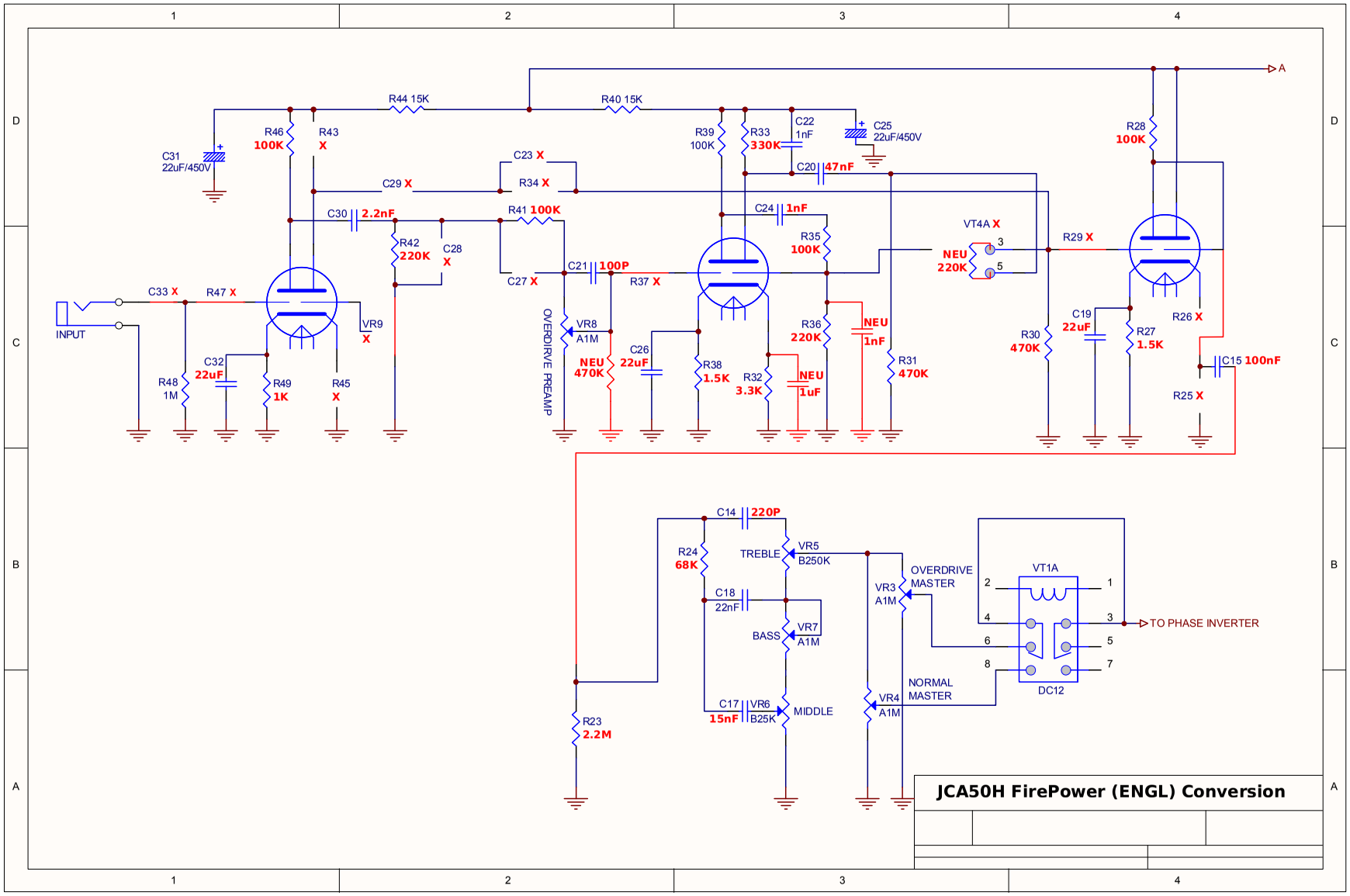
JCA50H FirePower (ENGL) Conversion
INPUT
OVERDRIVE PREAMP
TO PHASE INVERTER
VT1A
DC12
OVERDRIVE MASTER
NORMAL MASTER
TREBLE
BASS
MIDDLE
R44 15K
R40 15K
R46 100K
R43 X
C31 22uF/450V
C29 X
C23 X
R34 X
C30 2.2nF
R41 100K
R42 220K
C28 X
C27 X
C21 100P
R37 X
C33 X
R47 X
VR9 X
R48 1M
C32 22uF
R49 1K
R45 X
VR8 A1M
NEU 470K
C26 22uF
R39 100K
R33 330K
C22 1nF
C25 22uF/450V
C20 47nF
C24 1nF
R35 100K
R38 1.5K
R32 3.3K
NEU 1uF
R36 220K
NEU 1nF
R31 470K
VT4A X
NEU 220K
R29 X
R30 470K
R28 100K
C19 22uF
R27 1.5K
R26 X
C15 100nF
R25 X
A
C14 220P
R24 68K
VR5 B250K
C18 22nF
VR7 A1M
C17 15nF
VR6 B25K
R23 2.2M
VR3 A1M
VR4 A1M